Serie | 6, wall-mounted cooker hood, 60 cm, Stainless steel
DWB67JP50I



LED Light

The wall-mounted chimney hood: mount it on the wall, giving you complete freedom in your kitchen planning.

- **Easy-to-clean interior:** hidden screws and cables along with rounded edges make cleaning easy.
- **LED-Illumination:** The energy-saving lighting provides white and good lighting for the hob area.
- For fast and effective extraction, the intensive speed setting removes strong kitchen odours quickly and effectively.
- **Extraction rate:** Optimal performance to keep your kitchen odour free in no time

Technical Data

Typology : Wall-mounted
Length electrical supply cord : 130 cm
Height of the chimney : 582-908/568-1018 mm
Height of product, without chimney : 46 mm
Net weight : 15.186 kg
Type of control : Electronic
Number of speed settings : 3-stage + 2 intensive
Maximum output air extraction : 414 m^3/h
Boost position output recirculating : 409 m^3/h
Maximum output recirculating air : 330 m^3/h
Boost position air extraction : 657 m^3/h
Number of lights : 2
Noise level : 61 dB(A) re 1 pW
Diameter of air outlet : 120 / 150 mm
Grease filter material : Washable stainless steel
Odour filter : No
Operating Mode : Convertible
Delay Shut off modes : 10 min
Optional accessories : DHZ1225, DHZ1235, DHZ5325, DHZ5326, DWZ0XX0J5, DWZ1CB1I4, DWZ1CX1I6, DWZ1FX5C6, DWZ1FX5D1, DZZ0XX0P0, DZZ1CX1B4, DZZ1XX1B6, HEZG9AS00S
Type of lamps used : LED
Grease filter type : Multilayer cassette
Connection Rating : 143 W
Fuse protection : 10 A
Voltage : 220-240 V
Frequency : 50; 60 Hz
Installation typology : Wall-mounted
Material body : Stainless steel
Dimensions of the product, with chimney (if exists) (in) : / x x
Dimensions of the packed product : 23.22 x 25.59 x 26.37
Net weight : 33.000 lbs
Gross weight : 45.000 lbs
Motor location : Integrated motor in hood chimney
No-return airflow flap : Yes
Length electrical supply cord : 130 cm
Dimensions of the product, with chimney (if exists) : 614-1064 x 598.0 x 500.0 mm
Dimensions of the packed product (HxWxD) : 590 x 650 x 670 mm
Net weight : 15.186 kg
Gross weight : 20.4 kg

4 242005 195589

Serie | 6, wall-mounted cooker hood, 60 cm, Stainless steel
DWB67JP50I

The wall-mounted chimney hood: mount it on the wall, giving you complete freedom in your kitchen planning.

Design

- Box design
- Wall mounted hood
- Wall hood
- 60 cm stainless steel Box design hood
- Touch control with lightline

Performance

- 3 speeds plus 2 intensive
- Extraction rate according to EN 61591 ø 15 cm:
  max. Normal use 413 m^3/h
  Intensive 657 m^3/h
- Noise level according to EN 60704-3 und EN 60704-2-13
  exhaust air:
  Max. normal use: 61 dB(A) re 1 pW (48 dB(A) re 20 µPa sound pressure)
  Intensive: 71 dB(A) re 1 pW (58 dB(A) re 20 µPa sound pressure)
- Extraction rate in recirculation mode:
  Max. normal use: 281 m^3/h
  Intensive: 322 m^3/h
- Noise levels in recirculation mode:
  Max. normal use: 72 dB(A) re 1 pW (59 dB(A) re 20 µPa sound pressure)
  Intensive: 75 dB(A) re 1 pW (62 dB(A) re 20 µPa sound pressure)

Comfort

- Automatic revert setting, 6 minutes
- Automatic 10 minutes after running
- easy to clean innerframe
- Light dimmer function
- Softlight with dimmer function
- Efficient BLDC-technology
- 2 x 1.5W LED
- Light Intensity: 267 lux
- Colour Temperature: 3500 K
- Saturation display filter: grease- and charcoal filter
- Steel filter cover
- Steel filter cover, dishwasher safe
- Back-pressure flap: Yes
- Energy Efficiency Class: A
- Average Energy Consumption: 34.7 kWh/year*
- Blower Efficiency Class: A*
- Lighting Efficiency Class: A*
- Grease Filtering Efficiency Class: B*

Technical information

- Suitable for ducted or recirculating operation only
- Recirculation kit or clean air kit
- Chimney hood wall fixing system
- Dimensions recirculating with CleanAir module (HxWxD):
  689 x 598 x 500 mm - mounting with outer chimney
  795-1139 x 598 x 500 mm - mounting with telescopic chimney
- Dimensions exhaust air (HxWxD): 614-954 x 598 x 500 mm
- Dimensions recirculating (HxWxD): 614-1064 x 598 x 500 mm
- Diameter pipe Ø 150 mm (Ø 120 mm enclosed)
- Total Connected load: 143 W
- Connecting cable 130 cm
- Voltage: 220 - 240 V

** In accordance with the EU-Regulation No 65/2014*

Serie | 6, wall-mounted cooker hood, 60 cm, Stainless steel
DWB67JP50I

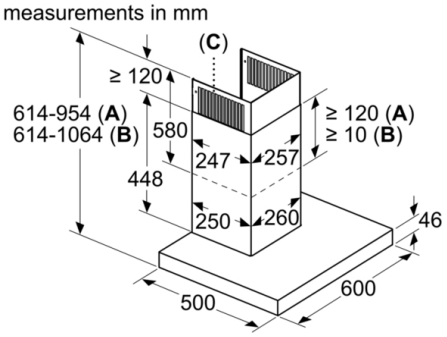

A: Air extraction
B: Air recirculation
C: Air outlet – slots for exhaust air to be mounted facing down

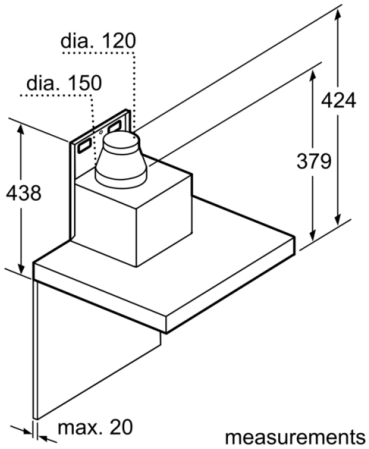

measurements in mm

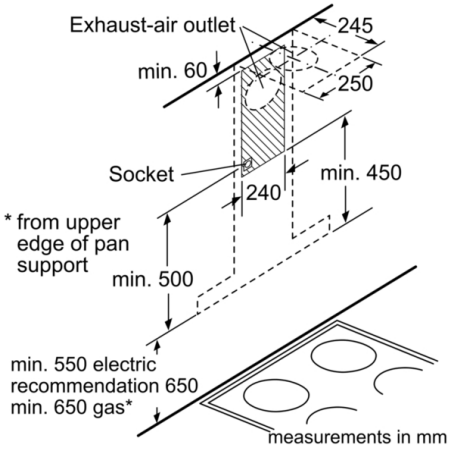

measurements in mm

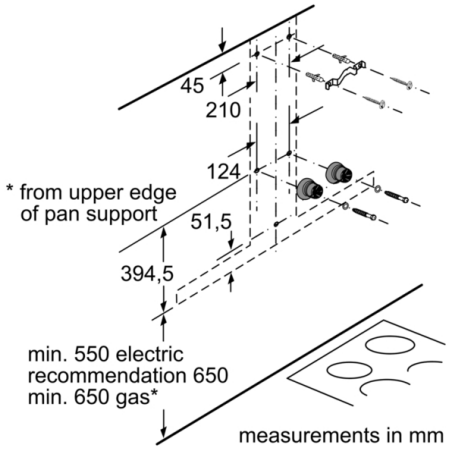

measurements in mm