ICO 915 Single Lever Kitchen Tap with revolutionary open spout concept



Fingerprint-Proof

Anti-Scale Aerator

Swivel Spout

PVD

DESCRIPTION	Single Lever Kitchen Tap with revolutionary open spout concept
LIFE STYLE	Maestro
COLOURS	
REFERENCE	REF. 116030009 EAN. 8434778003024

ICO 915

FEATURES

High spout kitchen tap
Revolutionary open spout concept
Swivel Spout
Five anti-scale aerators
3/8" - 1/2" flexible inlet pipes

ICO 915

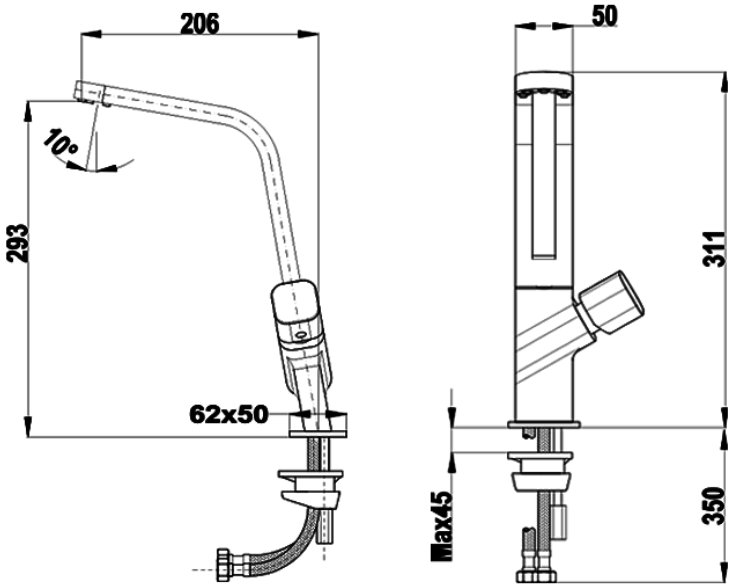

DIMENSIONS

Product height (mm): 311
Product width (mm):
Product depth (mm):
Product length (mm):
Net weight (Kg): 2,67

TECH SPECS

MODELS	**Type of installation:** Free standing