Brand	hansgrohe
Art. Name	**AddStoris Q** Grab bar
Art. Nr.	41744000
Surface	Chrome

reddot winner 2021

DESIGN AWARD 2021

Product picture



Drawing

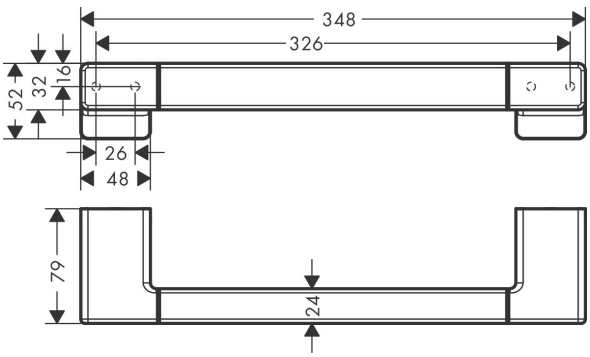

Features

- wall-mounted
- material: metal
- drilling distance: 326 mm
- length: 348 mm
- diameter drill hole: 6 mm
- with mounting material
- concealed fastening

Technology

Screw Fixation ⌀ 6mm

Moisture Proof