Series 6, Gas hob, 75 cm, Stainless steel
PCQ7A5M90

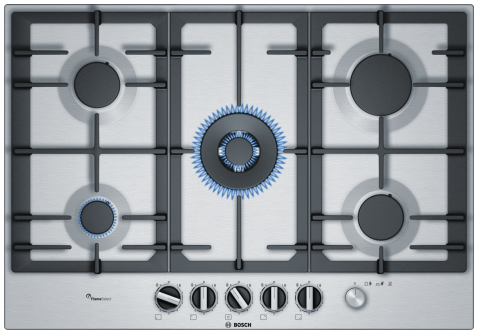

The stainless-steel gas hob with FlameSelect: achieve perfect cooking results thanks to nine precisely defined power levels.

HEZ211310	Simmer cap
HEZ298105	Simmer plate
HEZ298107	Wok ring
HEZ298115	Small pot support

Product name/family: ..... gas hob w integrated controls
Built-in / Free-standing: ..... Built-in
Energy input: ..... Gas
Total number of positions that can be used at the same time: 5
Type of control setting devices: ..... sword knobs
Required niche size for installation (HxWxD): 45 x 560-562 x 480-492 mm
Width of the appliance: ..... 750 mm
Dimensions: ..... 53x750x520 mm
Dimensions of the packed product (HxWxD): ..... 145 x 793 x 597 mm
Net weight: ..... 14.0 kg
Gross weight: ..... 15.5 kg
Residual heat indicator: ..... No
Location of control panel: ..... Front
Basic surface material: ..... Stainless steel
Color of surface: ..... Stainless steel
Length electrical supply cord: ..... 100.0 cm
Knob Material: ..... Plastic
Sealed Burners: ..... No
Type of pan support: ..... Elongated cast iron pan support
Power of heating element (kW): ..... 1 kW
Power of 3rd heating element (kW): ..... 1.75 kW
Power of 5th heating element (kW): ..... 3 kW
Connection rating: ..... 1 W
Gas connection rating: ..... 11500 W
Fuse protection: ..... 3 A
Voltage: ..... 220-240 V
Frequency: ..... 50; 60 Hz
Energy input: ..... Gas
Gas type preset: ..... Nat gas H/E/(L) 20 (25) mbar
Certified gas types: ..... Liquid gas G30,31 28-30/37mbar
Plug type: ..... No plug (electrical connection by electrician)
Appliance Dimensions (h x w x d) (in): ..... x x
Dimensions of the packed product: ..... 5.70 x 23.50 x 31.22
Net weight: ..... 31.000 lbs
Gross weight: ..... 34.000 lbs
Total number of positions that can be used at the same time: 5
Length electrical supply cord: ..... 100.0 cm
Required niche size for installation (HxWxD): 45 x 560-562 x 480-492 mm
Dimensions: ..... 53x750x520 mm
Dimensions of the packed product (HxWxD): ..... 145 x 793 x 597 mm
Net weight: ..... 14.0 kg
Gross weight: ..... 15.5 kg

4 242002 802763

Series 6, Gas hob, 75 cm, Stainless steel
PCQ7A5M90

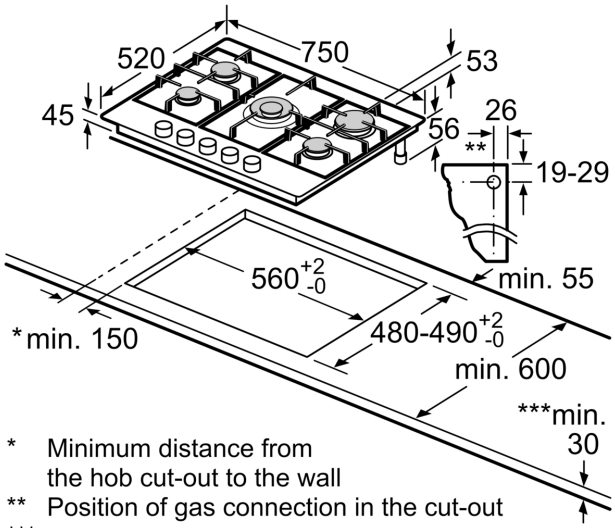

* Minimum distance from the hob cut-out to the wall
** Position of gas connection in the cut-out
*** With fitted oven underneath, possibly more; see space requirements for the oven

measurements in mm