DHI-DDR-C600

Memory Module With Heatsink



- Supports high-speed transmission and Intel XMP 2.0 one-click overclocking.
- High-quality wafers that perform outstandingly.
- Built with an elegant RGB metal heatsink that offers a smooth experience.
- Available in different capacity.
- Reliable quality and lifetime warranty.

System Overview

The C600 series Memory Module with Heatsink performs outstandingly with its high-speed transmission and support of Intel XMP 2.0 one-click overclocking. It is designed with an elegant RGB metal heatsink, which helps ensure the speed does not drop. It is also highly stable as it underwent compatibility tests with major brands of motherboards, allowing it to perform smoothly on various platforms.

Functions

Intel XMP 2.0 One-click Overclocking

With its outstanding performance, it offers high-speed transmission and instantly speeds up the device for you to enjoy a pleasant experience.

High-quality Particles

Highly stable, it contains high-quality particles that underwent compatibility tests with major brands of motherboards, allowing it to perform smoothly on various platforms.

Metal Heat Sink

Built with an elegant RGB metal heatsink, it has strong heat dissipation that helps ensure the speed does not drop.

Various Capacities

It comes in different capacities to meet your personal needs.

Lifetime Warranty

Provides warranty services and free technical support during the product's service life.

Scene

The memory module can be installed in desktops, laptops and similar devices to enhance their performance. It can also help the computer perform multiple tasks at the same time.

Technical Specification

Technical

Product Model	DHI-DDR-C600 UHD8G32	DHI-DDR-C600 UHW8G32	DHI-DDR-C600 UHD8G36	DHI-DDR-C600 UHW8G36
Capacity	8 GB	8 GB	8 GB	8 GB
Type	UDIMM			
Applicable	DDR4 Desktop			
Product Type	Memory Module with Heatsink			
Voltage	1.2V		1.35V	
CAS Latency	CL22		CL18	
Frequency	3200 MHz		3600 MHz	
Color	Black	White	Black	White
Number of Pins	288			
Operating Temperature	0 °C to +70 °C (32 °F to +158 °F)			
Storage Temperature	–20 °C to +85 °C (–4 °F to +185 °F)			
Operating Humidity	25%–85% (RH), non-condensing			
Warranty	Lifetime			
Product Dimensions	136.1 mm × 46.9 mm × 7.6 mm (5.36" × 1.85" × 0.30") (L × W × H)①			
Packaging Dimensions	176.6mm × 78.9 mm × 9.5 mm (6.95" × 3.11" × 0.37") (L × W × H)			
Net Weight	65 g (0.14 lb)			
Gross Weight	87 g (0.19 lb)			
Reference Information	① The thickness is calculated at the thickest point. 1. For different batches of products, memory chips of different brands and models will be used. All chips have been strictly tested to ensure quality. Chip brand and testing results of third-party softwares cannot be the basis for whether the product is genuine. 2. The same capacity products, there may be different number of chip combinations, which will be shipped randomly according to the inventory. 3. For memory modules of the same generation, the operating frequency is backward compatible. For example, the frequency of DDR4 includes 2666 MHz, 3200 MHz, 3600 MHz and more. The memory module with the frequency of 3600 MHz can be used in motherboards supporting 3200 MHz or 2666 MHz with lower frequency.			

Technical Specification

Technical

Product Model	DHI-DDR-C600 UHD16G32	DHI-DDR-C600 UHW16G32	DHI-DDR-C600 UHD16G36	DHI-DDR-C600 UHW16G36
Capacity	16 GB	16 GB	16 GB	16 GB
Type	UDIMM			
Applicable	DDR4 Desktop			
Product Type	Memory Module with Heatsink			
Voltage	1.2V		1.35V	
CAS Latency	CL22		CL18	
Frequency	3200 MHz		3600 MHz	
Color	Black	White	Black	White
Number of Pins	288			
Operating Temperature	0 °C to +70 °C (32 °F to +158 °F)			
Storage Temperature	–20 °C to +85 °C (–4 °F to +185 °F)			
Operating Humidity	25%–85% (RH), non-condensing			
Warranty	Lifetime			
Product Dimensions	136.1 mm × 46.9 mm × 7.6 mm (5.36" × 1.85" × 0.30") (L × W × H)①			
Packaging Dimensions	176.6mm × 78.9 mm × 9.5 mm (6.95" × 3.11" × 0.37") (L × W × H)			
Net Weight	65 g (0.14 lb)			
Gross Weight	87 g (0.19 lb)			
Reference Information	① The thickness is calculated at the thickest point. 1. For different batches of products, memory chips of different brands and models will be used. All chips have been strictly tested to ensure quality. Chip brand and testing results of third-party softwares cannot be the basis for whether the product is genuine. 2. The same capacity products, there may be different number of chip combinations, which will be shipped randomly according to the inventory. 3. For memory modules of the same generation, the operating frequency is backward compatible. For example, the frequency of DDR4 includes 2666 MHz, 3200 MHz, 3600 MHz and more. The memory module with the frequency of 3600 MHz can be used in motherboards supporting 3200 MHz or 2666 MHz with lower frequency.			

Technical Specification

Technical

Product Model	DHI-DDR-C600 URG16G36D	DHI-DDR-C600 URW16G36D	DHI-DDR-C600 URG32G36D	DHI-DDR-C600 URW32G36D
Capacity	8 GB * 2	8 GB * 2	16 GB * 2	16 GB * 2
Type	UDIMM			
Applicable	DDR4 Desktop			
Product Type	RGB Memory Module			
Voltage	1.35V		1.35V	
CAS Latency	CL18		CL18	
Frequency	3600 MHz		3600 MHz	
Color	Gray	White	Gray	White
Number of Pins	288			
Operating Temperature	0 °C to +70 °C (32 °F to +158 °F)			
Storage Temperature	–20 °C to +85 °C (–4 °F to +185 °F)			
Operating Humidity	25%–85% (RH), non-condensing			
Warranty	Lifetime			
Product Dimensions	136.1 mm × 46.9 mm × 7.6 mm (5.36" × 1.85" × 0.30") (L × W × H)①			
Packaging Dimensions	176.6mm × 78.9 mm × 9.5 mm (6.95" × 3.11" × 0.37") (L × W × H)			
Net Weight	65 g × 2 (0.14 lb × 2)			
Gross Weight	169.5 g (0.37 lb)			
Reference Information	① The thickness is calculated at the thickest point. 1. For different batches of products, memory chips of different brands and models will be used. All chips have been strictly tested to ensure quality. Chip brand and testing results of third-party softwares cannot be the basis for whether the product is genuine. 2. The same capacity products, there may be different number of chip combinations, which will be shipped randomly according to the inventory. 3. For memory modules of the same generation, the operating frequency is backward compatible. For example, the frequency of DDR4 includes 2666 MHz, 3200 MHz, 3600 MHz and more. The memory module with the frequency of 3600 MHz can be used in motherboards supporting 3200 MHz or 2666 MHz with lower frequency.			

Ordering Information

Type	Model	Description
C600 SERIES	DHI-DDR-C600UHD8G32	C600 Series DDR4 3200 8 GB Memory Module for Desktops-Dark
	DHI-DDR-C600UHW8G32	C600 Series DDR4 3200 8 GB Memory Module for Desktops-White
	DHI-DDR-C600UHD8G36	C600 Series DDR4 3600 8 GB Memory Module for Desktops-Dark
	DHI-DDR-C600UHW8G36	C600 Series DDR4 3600 8 GB Memory Module for Desktops-White
	DHI-DDR-C600UHD16G32	C600 Series DDR4 3200 16 GB Memory Module for Desktops-Dark
	DHI-DDR-C600UHW16G32	C600 Series DDR4 3200 16 GB Memory Module for Desktops-White
	DHI-DDR-C600UHD16G36	C600 Series DDR4 3600 16 GB Memory Module for Desktops-Dark
	DHI-DDR-C600UHW16G36	C600 Series DDR4 3600 16 GB Memory Module for Desktops-White
	DHI-DDR-C600URG16G36D	C600 Series DDR4 3600 8 GB * 2 RGB Memory Module Kit for Desktops-Gray
	DHI-DDR-C600URW16G36D	C600 Series DDR4 3600 8 GB * 2 RGB Memory Module Kit for Desktops-White
	DHI-DDR-C600URG32G36D	C600 Series DDR4 3600 16 GB * 2 RGB Memory Module Kit for Desktops-Gray
	DHI-DDR-C600URW32G36D	C600 Series DDR4 3600 16 GB * 2 RGB Memory Module Kit for Desktops-White

Dimensions (mm[inch])

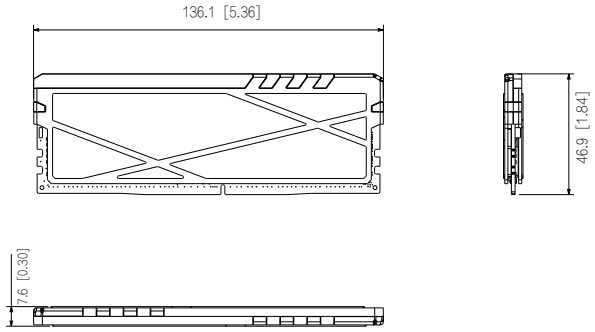

Rev 002.000 © 2023 Dahua. All rights reserved. Design and specifications are subject to change without notice.
The images, specifications and information mentioned in the document are only for reference, and might differ from the actual product.