Serie | 2, Fully-integrated dishwasher, 60 cm
SMV2ITX18G





Connected dishwasher with noise reduction at any time via the Home Connect App.

- **Home Connect:** home appliances with smart connectivity for an easier everyday life.
- **ExtraDry:** extra drying option for difficult-to-dry loads.
- **Silence on demand:** up to 30 min noise reduction at any time via the Home Connect App.
- **InfoLight:** a red infolight on the floor indicates whether the dishwasher is switched on or off.
- **AquaStop:** lifetime warranty for water damages guaranteed.

Technical Data

Energy Efficiency Class: E
Energy Consumption for 100 cycles Eco Programme: 92 kWh
Maximum number of place settings: 12
The water consumption of the eco programme in liters per cycle: 10.5 l
Programme duration: 4:30 h
Airborne acoustical noise emissions : 48 dB
Airborne acoustical noise emission class: C
Construction type: Built-in
Height of removable worktop: 0 mm
Dimensions of the product (HxWxD): 815 x 598 x 550 mm
Required niche size for installation (HxWxD): 815-875 x 600 x 550 mm
Approval certificates: CE, VDE
Depth with open door 90 degree: 1150 mm
Adjustable feet: Yes - all from front
Maximum adjustability feet: 60 mm
Adjustable plinth: both horizontal and vertical
Net weight: 30.910 kg
Gross weight: 33.2 kg
Connection rating (W): 2400 W
Fuse protection: 10 A
Voltage (V): 220-240 V
Frequency (Hz): 50; 60 Hz
Length of electrical supply cord: 175 cm
Plug type: GB plug
Length inlet hose: 165 cm
Length outlet hose: 190 cm
EAN code: 4242005275069
Installation type: Full-integrated

Optional accessories

SGZ1010 : inlet and outlet hose extention
SMZ5006 : decorative strips 81cm st.steel
SMZ5300 : GlassSecure Tray

4 242005 275069

Serie | 2, Fully-integrated dishwasher, 60 cm SMV2ITX18G

Connected dishwasher with noise reduction at any time via the Home Connect App.

New for 2021

Performance

- Energy Efficiency Class[1]: E
- Energy[2] / Water[3]: 92 kWh / 10.5 litres
- Capacity: 12 place settings
- Programme duration[4]: 4:30 (h:min)
- Noise level: 48 dB(A) re 1 pW
- Noise Efficiency Class: C

Programmes / functions

- 5 programmes: Eco 50 °C, Auto 45-65 °C, Intensive 70 °C, Express 65°, Favourite
- Default favourite programme: Pre-Rinse
- 4 special options: Remote Start, Extra Dry, Half Load, SpeedPerfect
- Machine Care
- Silence on Demand (via app)

Flexible design elements

- Normal baskets
- Low friction wheels on bottom basket
- Rack Stopper to prevent derailing of bottom basket
- Cutlery basket in lower rack
- Upper rack cup shelf
- Glass holder in top basket

Innovations and technology

- Home Connect ready on WLAN
- DosageAssist detergent dispenser
- EcoSilence BLDC drive
- Automatic detergent detection
- Aqua and loading sensor
- AquaMix - Glass protection system

Design features

- Push button top edge controls
- InfoLight (Red) - Light projection on the floor
- Time delay (3, 6 or 9 hours)
- AquaStop: Bosch warranty in case of water damage - for the lifetime of the appliance. Please find warranty terms under https://www.bosch-home.co.uk/customer-service/care-protection-and-parts/additional-warranties
- Self cleaning filter system with 3 piece corrugated filter
- Large item spray head, steam protection plate
- Stainless steel/Polinox interior
- Dimensions (HxWxD): 81.5 x 59.8 x 55cm

[1] Scale of Energy Efficiency Classes from A to G
[2] Energy consumption in kWh per 100 cycles (in programme Eco 50 °C)
[3] Water consumption in litres per cycle (in programme Eco 50 °C)

Serie | 2, Fully-integrated dishwasher, 60 cm
SMV2ITX18G

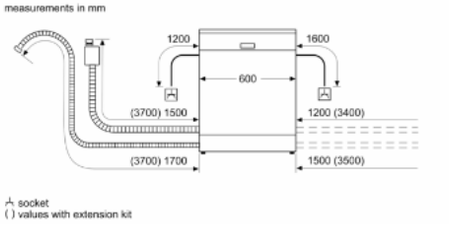

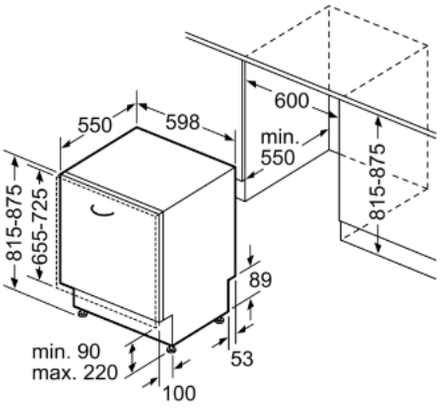

measurements in mm